KARAT suspended bowl



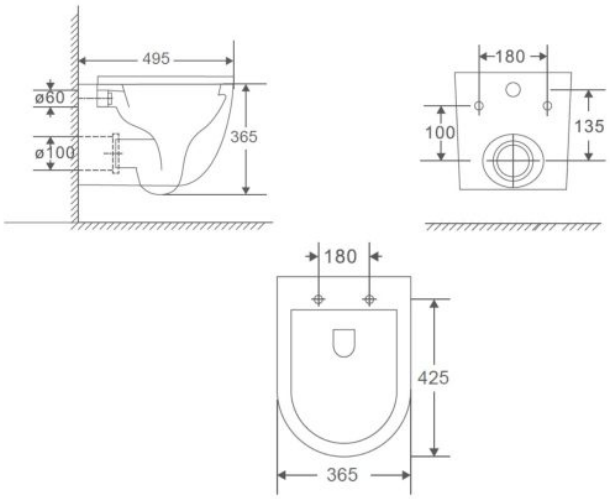

Variants:

Index	Tornado System	Bidet function	Colour	Dimensions [mm]	Weight [kg]	EAN code
CER.MI.KARAT.BEZ	Never	Never	White	495 x 365 x 365	27	5903887105316
CER.MI.KARAT.TOR	Yes	Never	White	495 x 365 x 365	27	5903887105354

Parameters:

- Warranty: 10 years
- Material: Ceramic

Description:

Discover the modern KARAT wall-hung toilet , which combines functionality, aesthetics, and ease of use. This model was designed with comfort and hygiene in mind in every bathroom:

• Flangeless design ensures easier cleaning and eliminates places where dirt and bacteria accumulate.

• Hidden mount increases aesthetics and facilitates installation.

• SLIM toilet seat made of durable duroplast, equipped with a slow-fall and easy-release system, which further facilitates hygiene maintenance.

The TORNADO flushing system is an innovative, rotating water flush that guarantees thorough and effective cleaning of the bowl interior.

The KARAT bowl is the perfect combination of functionality, modern design, and durability. Choose a product that meets your highest expectations.